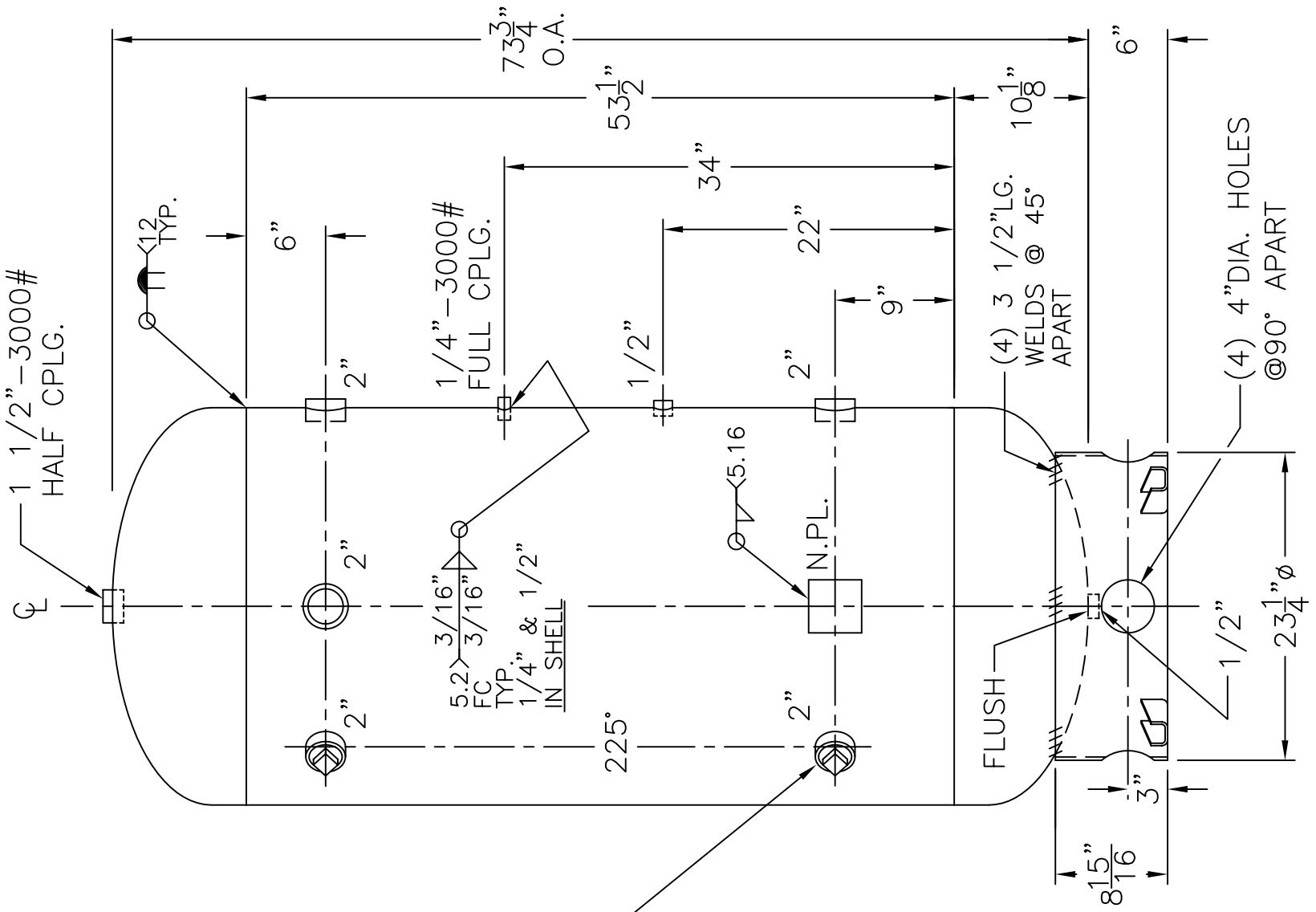

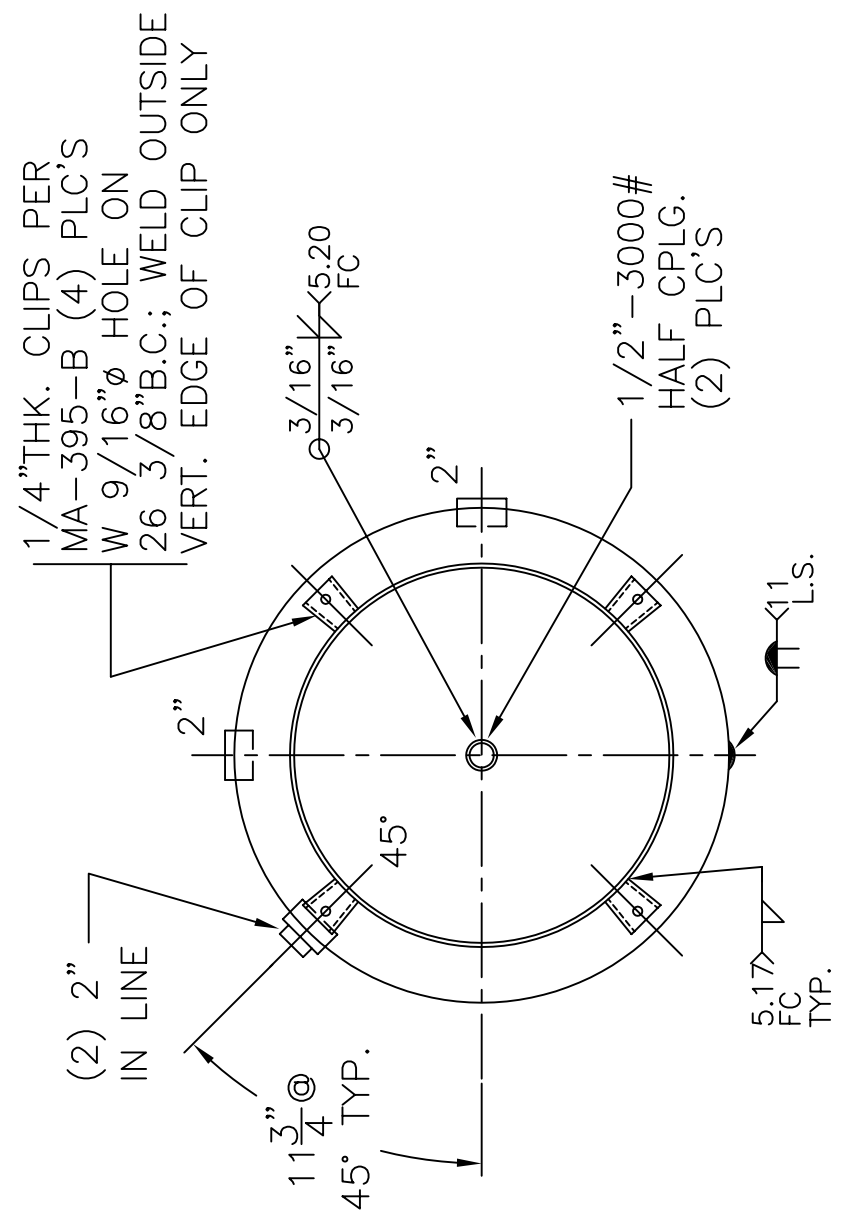

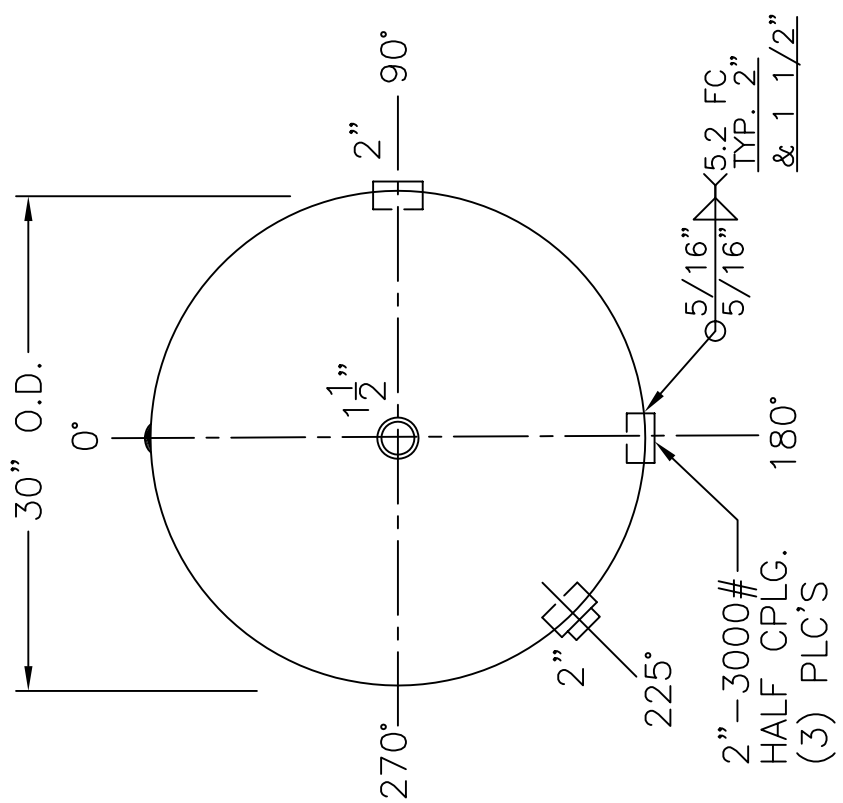

NOTE: 1) HYDRO @ 520 PSIG. MIN.

SHELL / HEADS	.337" SA–455 2:1 S.E.	
	TRIM (.324"MIN.)	
	.337" SA–455	
M.A.W.P.	400 PSIG. @ 400 °F	
M.D.M.T.	–20 °F @ 400 PSIG.	
ASME. SECTION VIII	DIV. 1, 2007 ADD 2008	
X–RAY: RT–4 SPOT L.S. ONLY		
GALLONS: 200	WT. 795 LBS.	
SERIAL NO.		
N.B.		

30–VJ–200–R	REV. 7–30–09
	DATE: 3–24–99
FOR: HANSON STANDARD	
VERT. AIR TANK	
INSIDE: UNPAINTED	
OUTSIDE: PRIME	
CAD–"B" SIZE UNDER "STD"–SERIES	
BY: J.G.	SCALE: 1"=12"

ROY E. HANSON JR. MFG.
1600 E. WASHINGTON BLVD.
LOS ANGELES, CA 90021