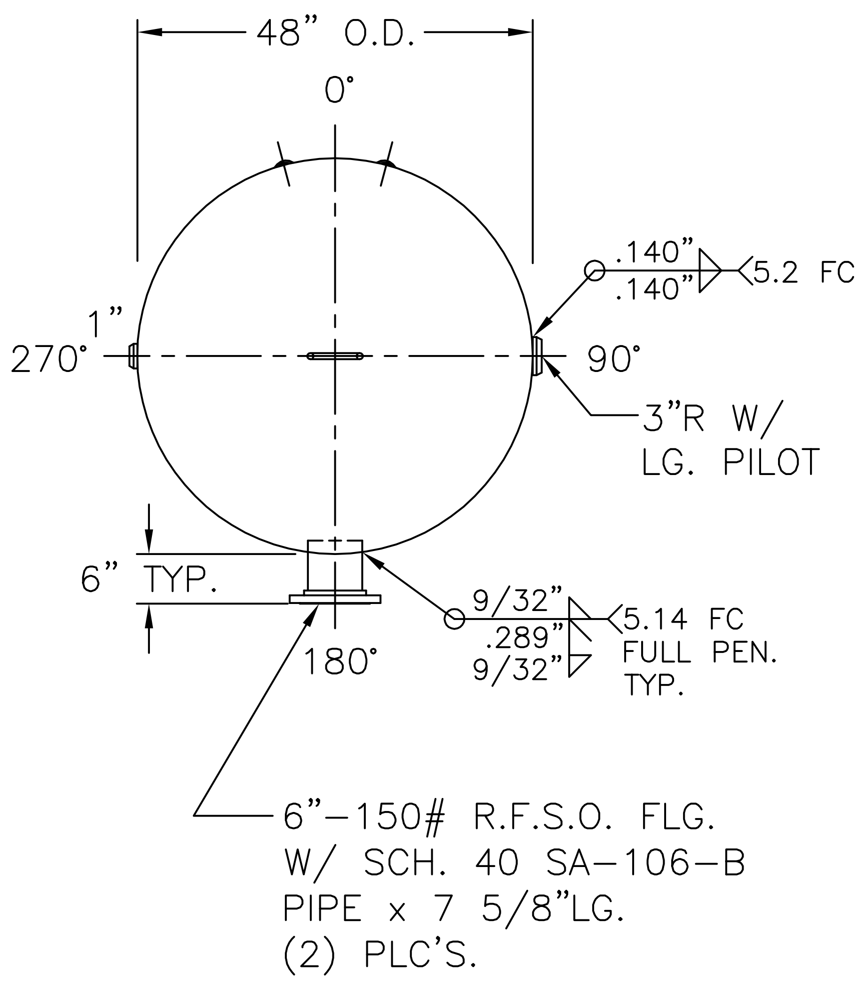

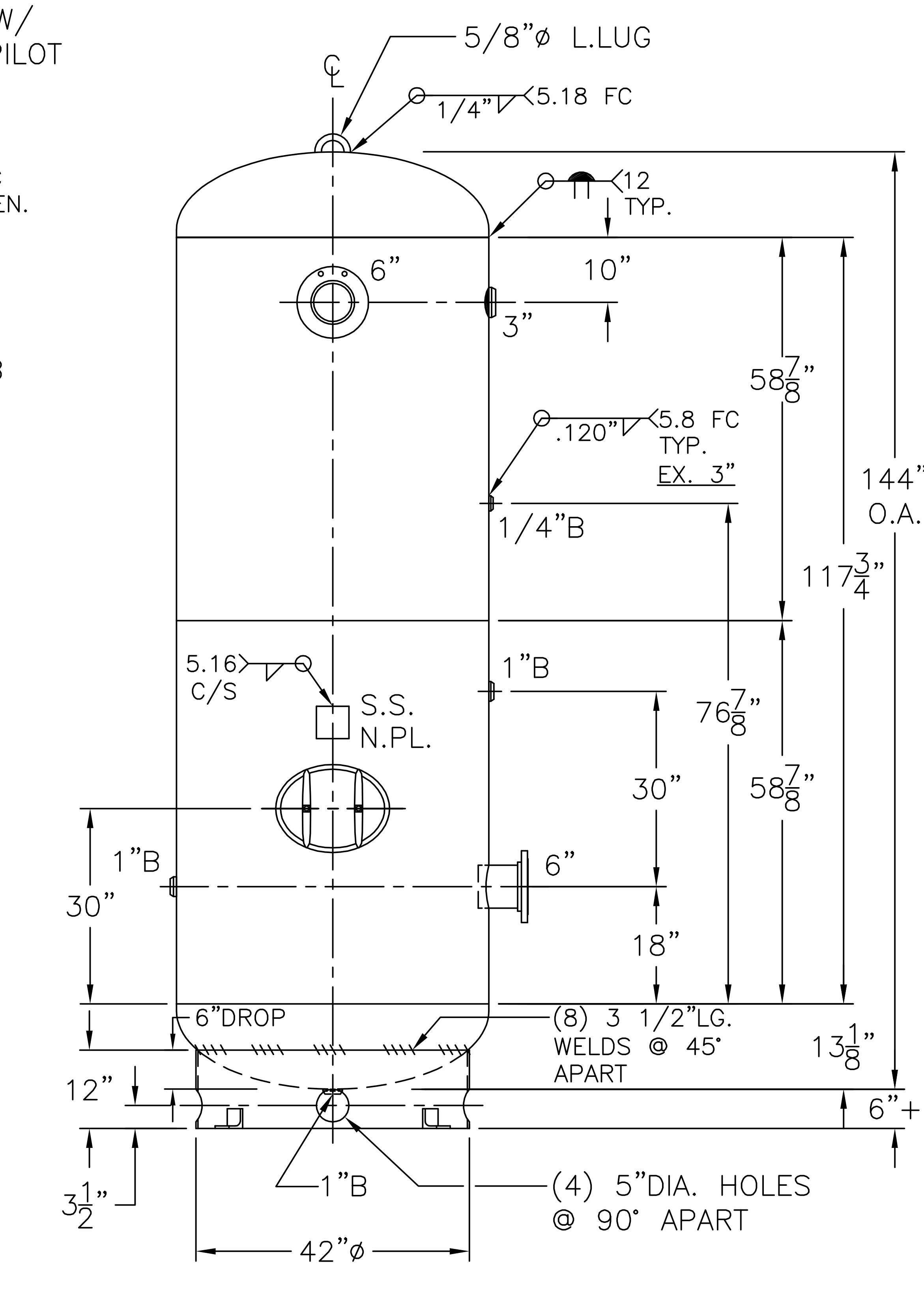

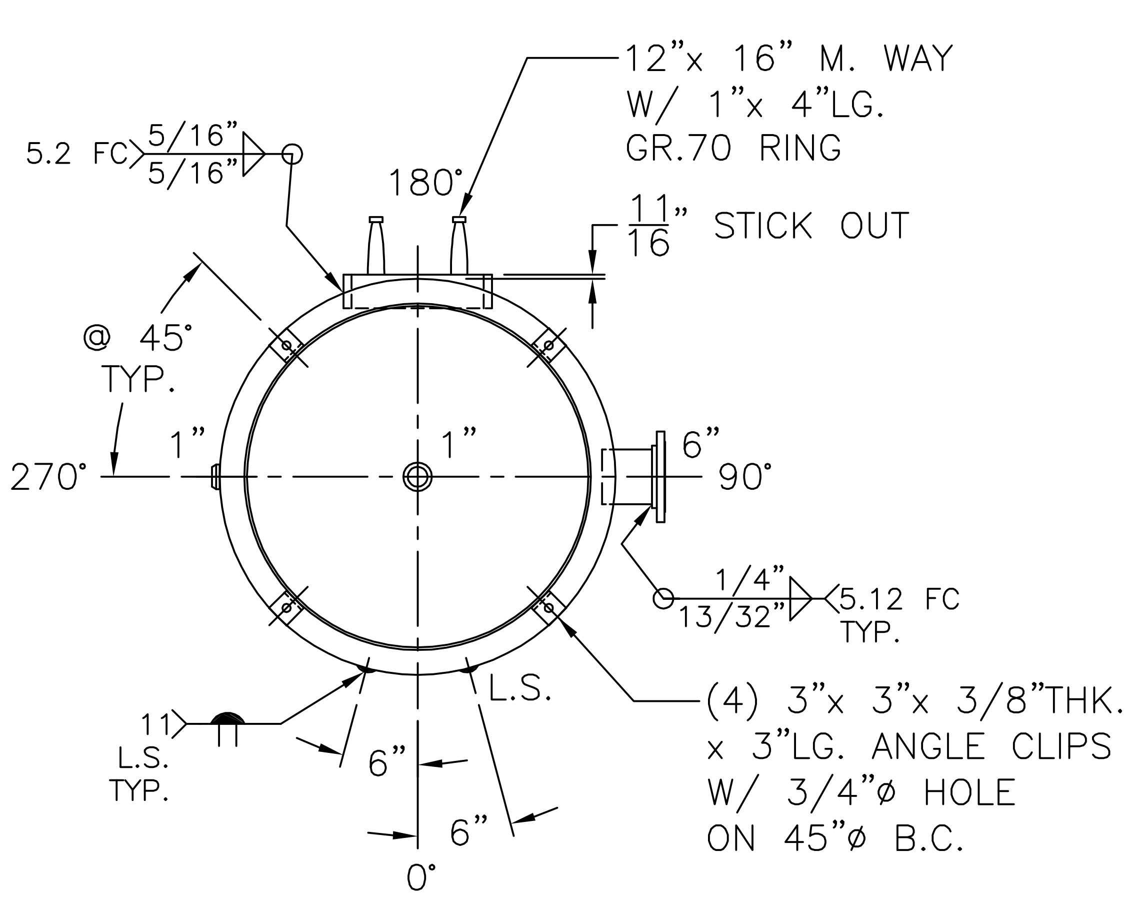

NOTE:
1) HYDRO @ 260 PSIG. MIN.
2) DRAIN FOR HORIZONTAL MOUNT ADDED AFTER SERIAL #423,136
3) CRN #U5219.2

SHELL / HEADS
.250" SA-455 2:1 S.E.
JOGGLE
.289" SA-455

M.A.W.P. 200 PSIG. @ 400 °F	
M.D.M.T. -20 °F @ 200 PSIG.	
ASME. SECTION VIII DIV. 1, 2013	
X-RAY: RT-4 SPOT L.S. & HDS. G.S.	
GALLONS: 1060	WT. 2128 LBS.
SERIAL NO.	
N.B.	

48-VA-1060-R	REV. 6-10-14 DATE: 10-27-98
FOR: HANSON STANDARD	
VERT. AIR TANK	
UW-21(b)	
INSIDE: UNPAINTED	
OUTSIDE: PRIME	
CAD "B" SIZE UNDER "STD"-SERIES	
BY: E.S.	SCALE: 1/2"=12"

ROY E. HANSON JR. MFG.
1600 E. WASHINGTON BLVD.
LOS ANGELES, CA 90021