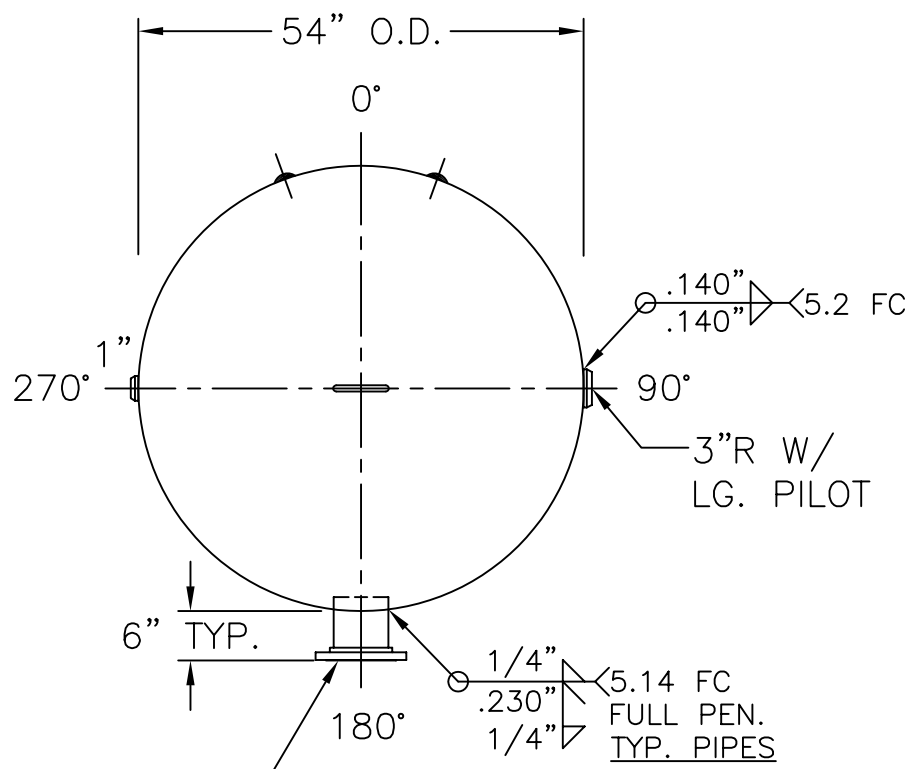

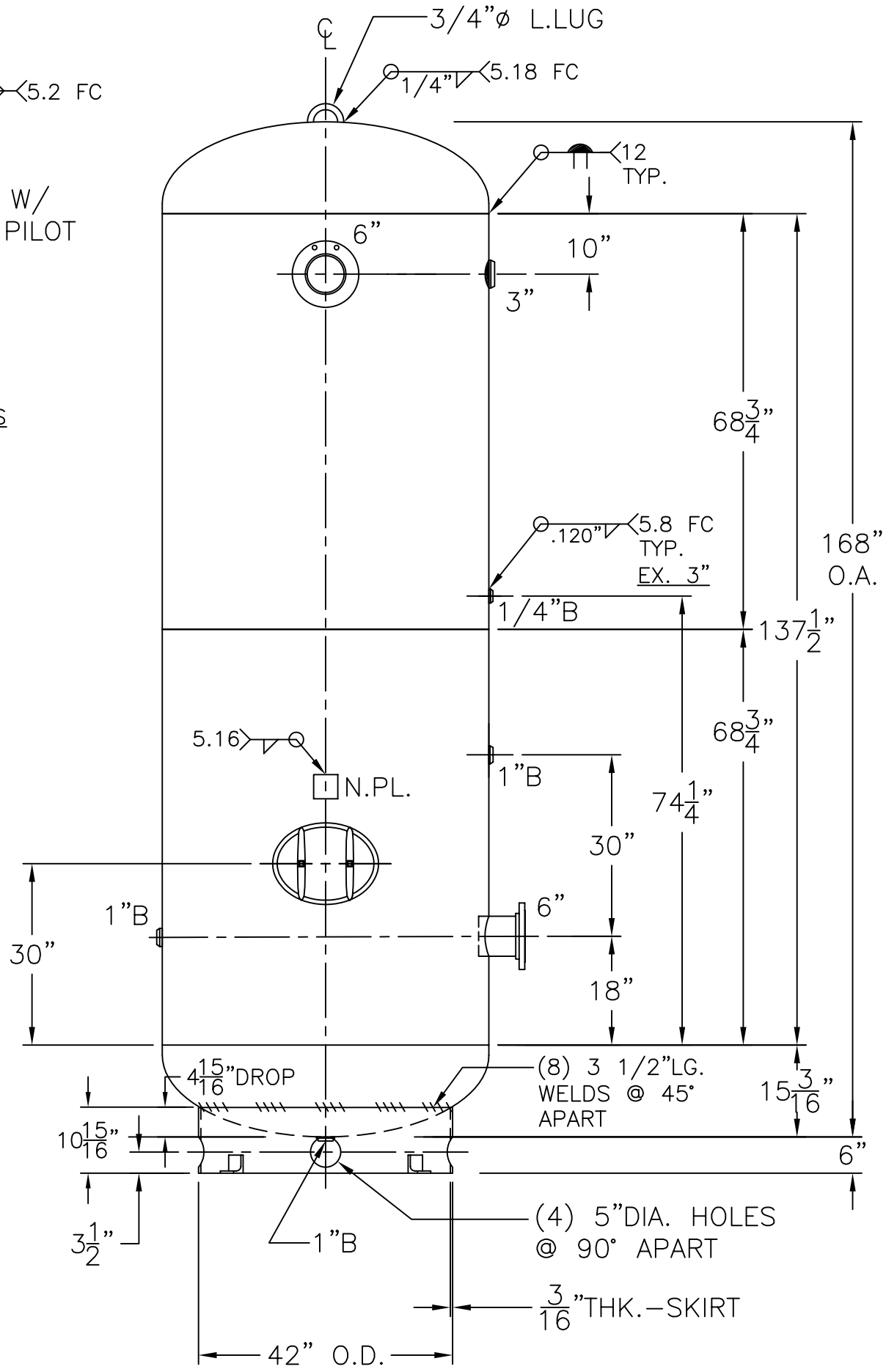

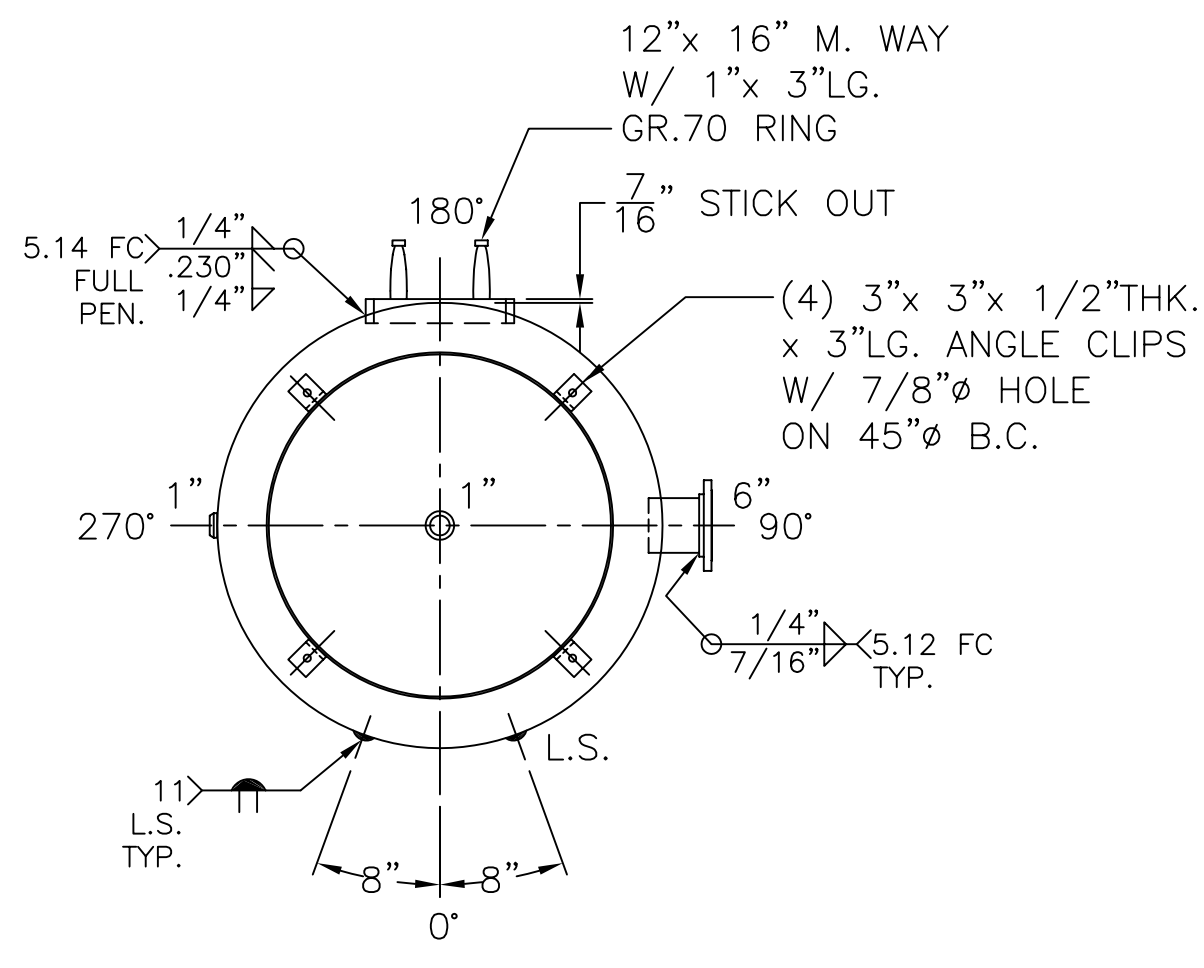

NOTE: 1) HYDRO @ 195 PSIG. MIN.
2) DRAIN FOR HORIZONTAL MOUNT ADDED AFTER SERIAL #423,136

SHELL / HEADS	
	.250" SA–455 2:1 S.E.
	JOGGLE
	.230" SA–455
M.A.W.P. 150 PSIG. @ 400 °F	
M.D.M.T. –20 °F @ 150 PSIG.	
ASME. SECTION VIII DIV. 1, 2010 ADD 2010	
X–RAY: RT–4 SPOT L.S. ONLY	
GALLONS: 1550	WT. 2340 LBS.
SERIAL NO.	
N.B.	

54–VP–1550–R	REV. 11–23–11
	DATE: 8–12–92
FOR: HANSON STANDARD	
VERT. AIR TANK	
UW–21(b)	
INSIDE: UNPAINTED	
OUTSIDE: PRIME	
CAD "B" SIZE UNDER "STD"–SERIES	
BY: E.S.	SCALE: 1/2"=12"

ROY E. HANSON JR. MFG.
1600 E. WASHINGTON BLVD.
LOS ANGELES, CA 90021