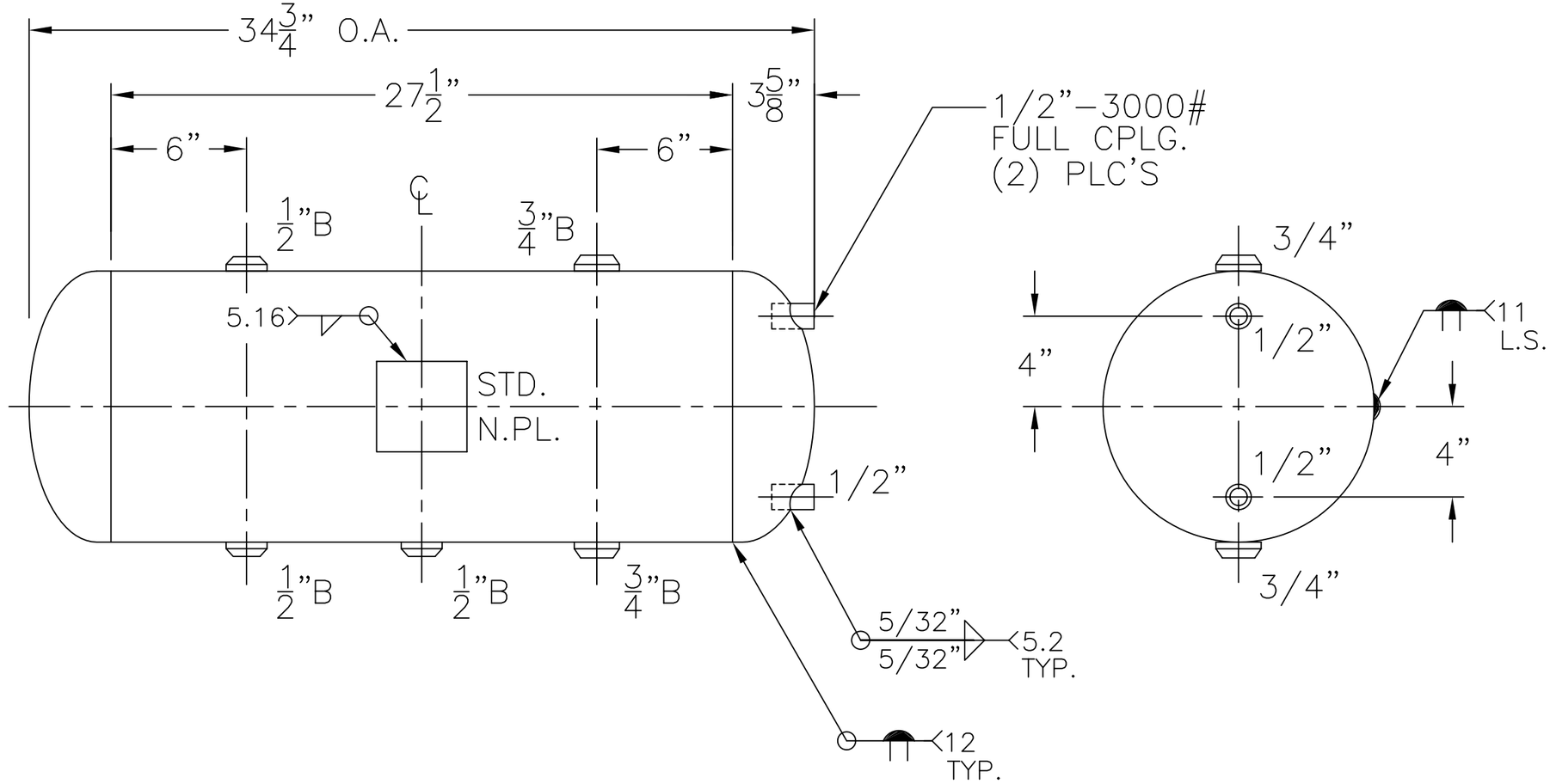

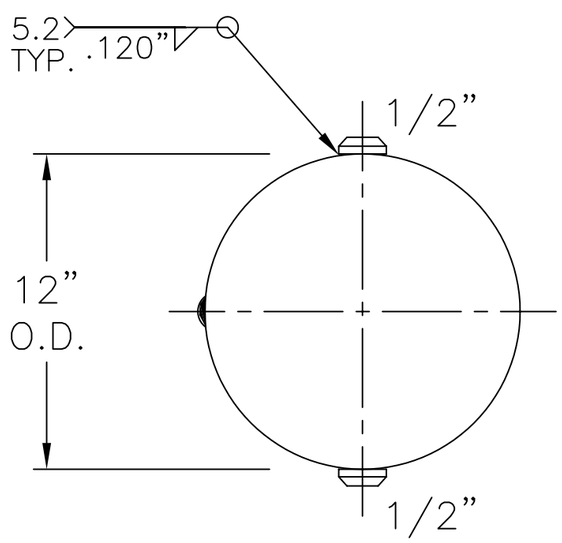

NOTE: 1) HYDRO @ 195 PSIG. MIN.

SHELL / HEADS	.135" SA-414-G 2:1 S.E.	
	JOGGLE	
	.135" SA-414-G	
M.A.W.P.	150 PSIG. @ 347 °F	
M.D.M.T.	-20 °F @ 150 PSIG.	
ASME. SECTION VIII	DIV. 1, 2007 ADD 2008	
X-RAY:	RT-NO	
GALLONS:	15	WT. 60 LBS.
SERIAL NO.		
N.B.		

X-15	REV. 5-8-09
	DATE: 10-8-66
FOR: HANSON STANDARD	
HORIZ. EXPANSION TANK	
INSIDE: UNPAINTED	
GALVANIZING OPTIONAL	
OUTSIDE: PRIME	
BY: J.G.	SCALE: 1/8"=1"

ROY E. HANSON JR. MFG.

1600 E. WASHINGTON BLVD.
LOS ANGELES, CA 90021