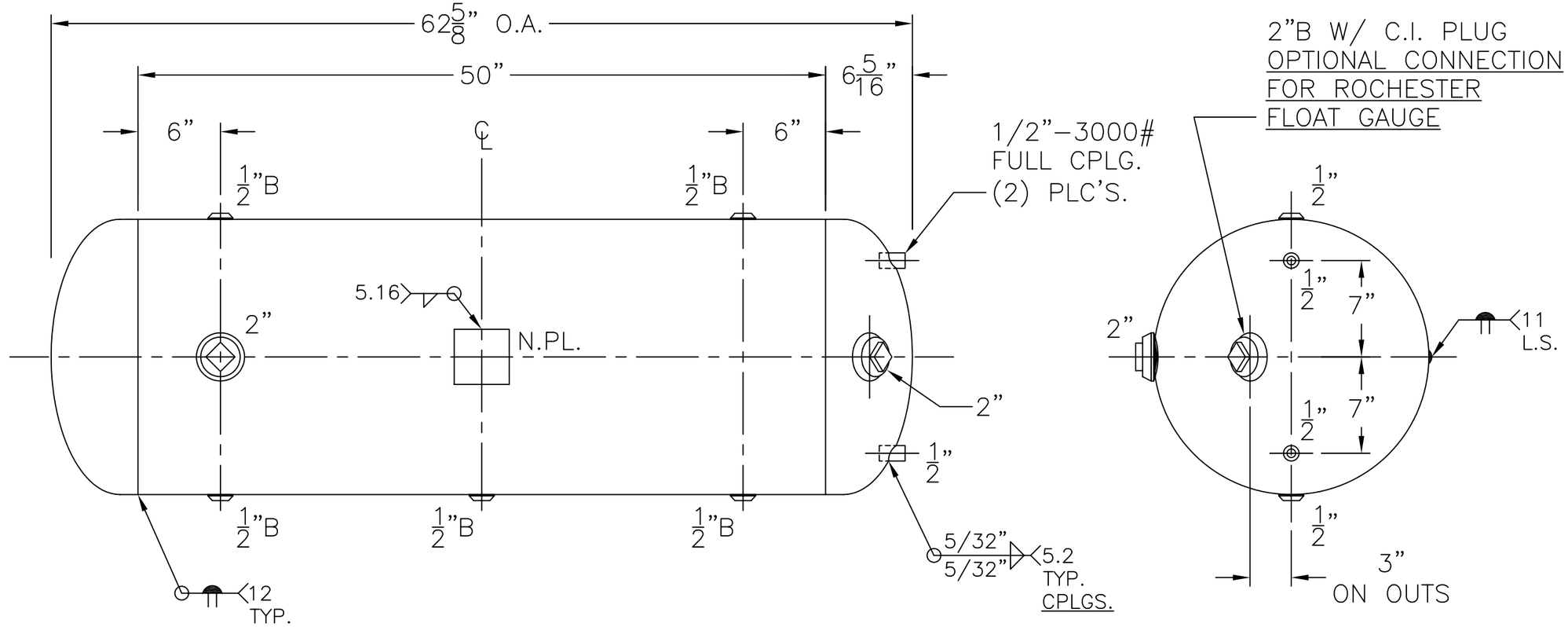

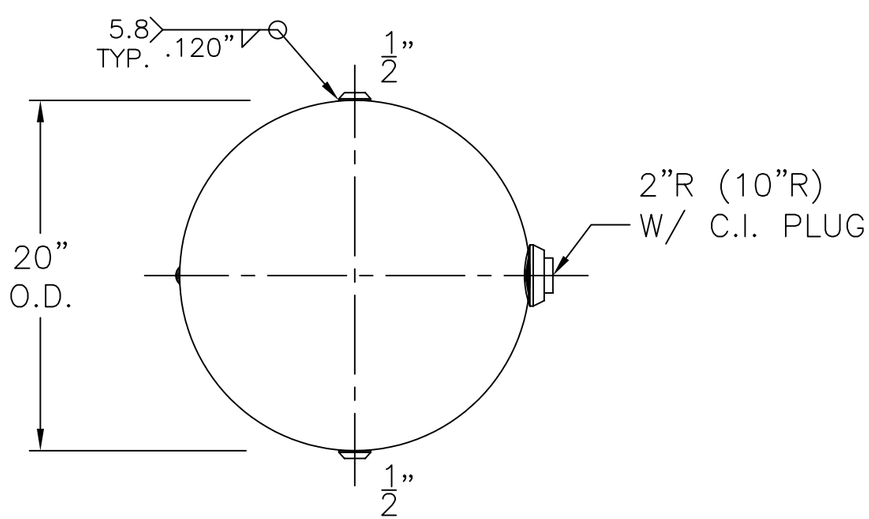

NOTE: 1) HYDRO @ 195 PSIG. MIN.

SHELL / HEADS	.135" SA–414–G 2:1 S.E.	
	JOGGLE – .149" OFFSET	
	.135" SA–414–G	
M.A.W.P. 150 PSIG. @ 347 °F		
M.D.M.T. –20 °F @ 150 PSIG.		
ASME. SECTION VIII DIV. 1, 2007 ADD 2008		
X–RAY: RT–NO		
GALLONS: 80	WT. 158 LBS.	
SERIAL NO.		
N.B.		

X–80	REV. 5–8–09
	DATE: 10–8–68
FOR: HANSON STANDARD	
HORIZ. EXPANSION TANK	
INSIDE: UNPAINTED	
(GALVANIZING OPTIONAL)	
OUTSIDE: PRIME	
BY: E.S.	SCALE: 1"–12"

ROY E. HANSON JR. MFG.

1600 E. WASHINGTON BLVD.
LOS ANGELES, CA 90021