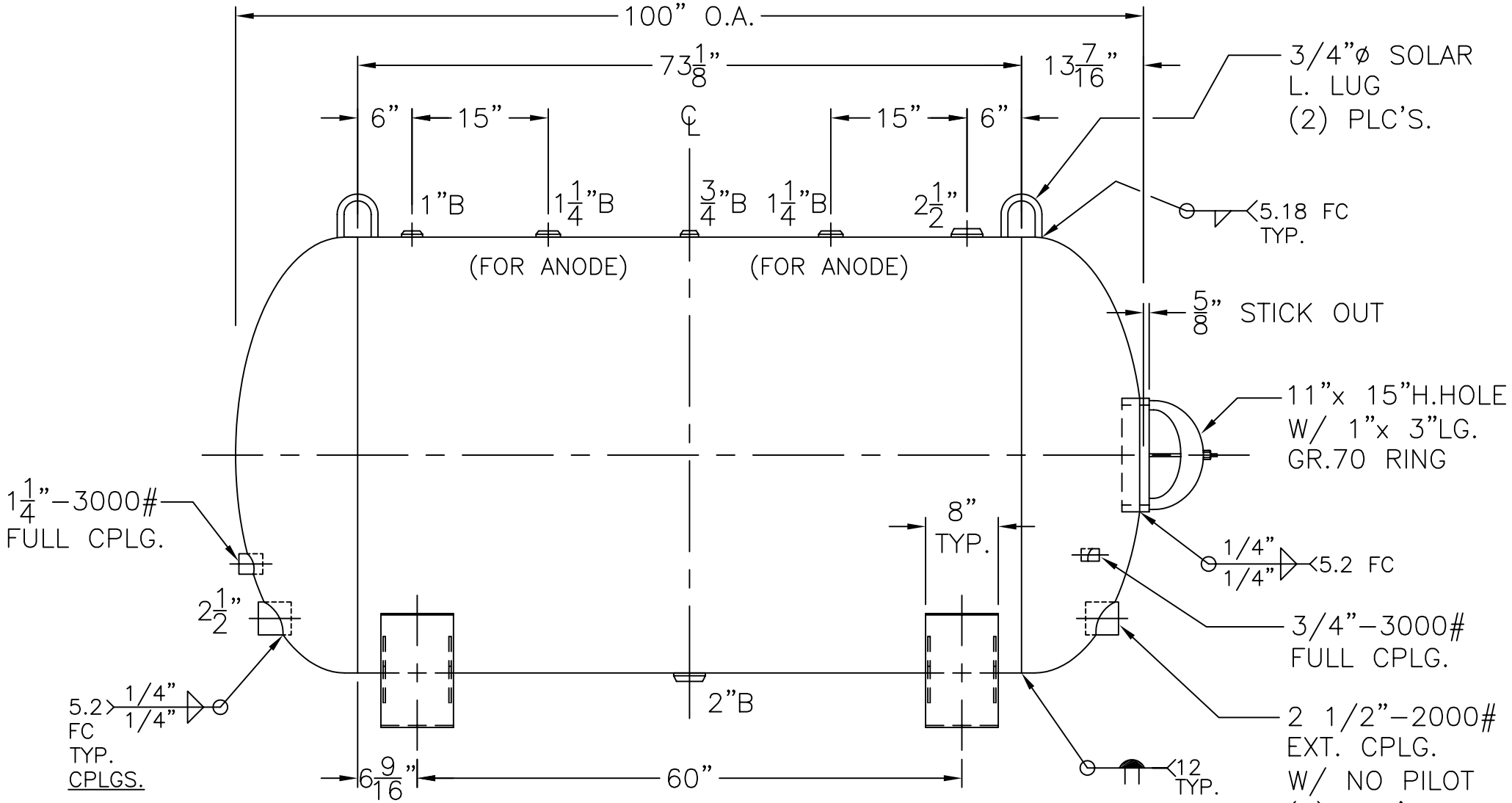

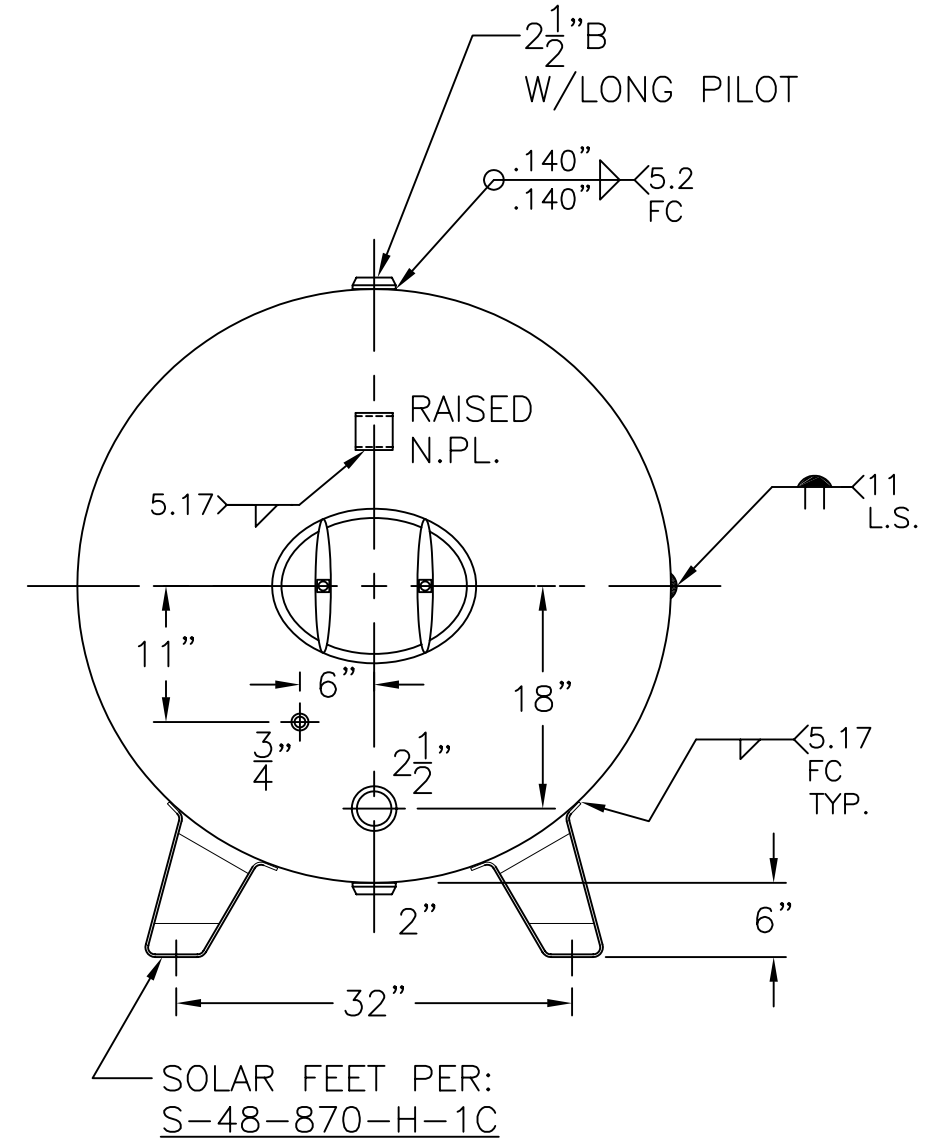

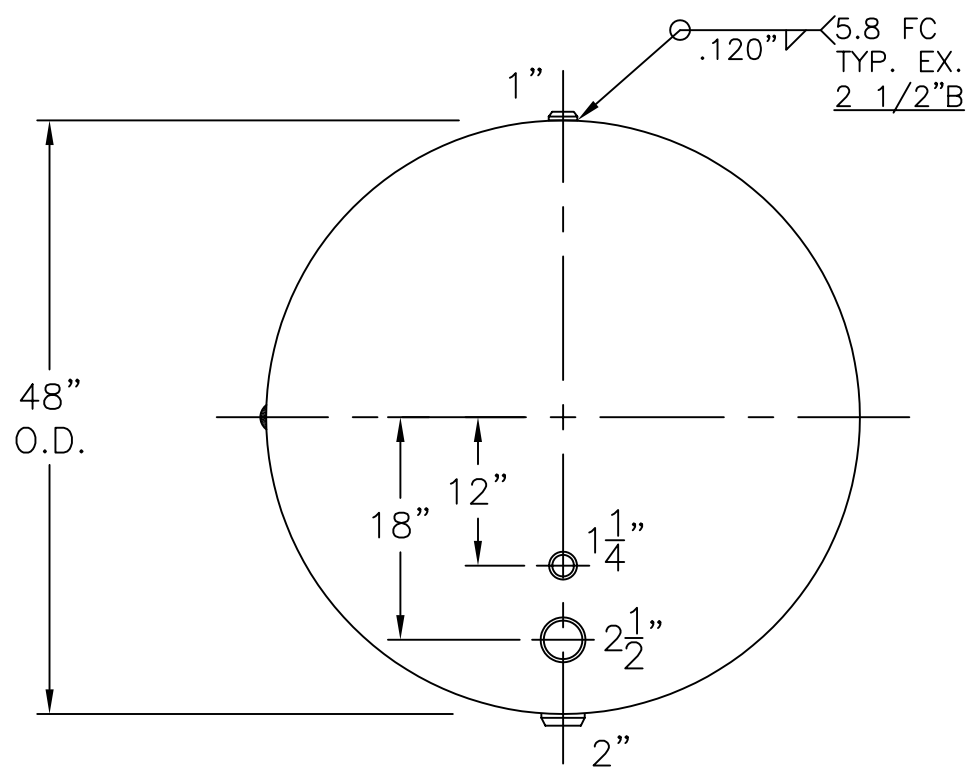

END VIEW W/O SUPPORTS

3) SHELL: 4-22-04 PROOF TEST.
2) HYDRO @ 240 PSIG. MIN.
NOTE: 1) SHIP LOOSE W/ (2) 1 5/16"x 48"LG. FLEX. MAG. ANODES.

SHELL / HEADS	.250" SA-414-G 2:1 S.E.	GS-48-712-H	REV. 10-31-11
	JOGGLE - .198 OFFSET		DATE: 5-15-90
		FOR: HANSON STANDARD	
		HORIZ. HOT WATER TANK	
	.200" SA-455		
		SURFACE AREA = 113.0 SQ. FT.	
		INSIDE: GLASS LINED	
M.A.W.P. 160 PSIG. @ 210 °F			
		OUTSIDE: PRIME	
ASME SECTION IV 2010 ADD. 2010		CAD-"B" UNDER "STD"-SERIES	
X-RAY: RT-NO/H.L.W.		BY: J.G.	SCALE: 3/4"=12"
GALLONS: 712	WT. 1159 LBS.	ROY E. HANSON JR. MFG.	
SERIAL NO.		1600 E. WASHINGTON BLVD. LOS ANGELES, CA 90021	